CHELSOM

INSTALLATION INSTRUCTION

1. The installation of all electrical products should be undertaken with utmost care and a qualified electrician should carry out the work to ensure compliance with any local wiring regulations.
2. Always ensure that the mains electrical supply is disconnected before removing an existing luminaire and installing a new one.
3. Check the routing of electrical supply cable to avoid cutting it or damaging it during installation.
4. Make all electrical connections in accordance with the instructions attached to the luminaire itself following relevant local codes and regulations at all times. Ensure all connections are not loose with wire parts properly covered.
5. Ensure the light source is compatible with local voltage and follow any maximum wattage instructions shown on the product itself.
6. If you have any questions regarding the installation of this luminaire, please contact Chelsom Head Office for assistance.

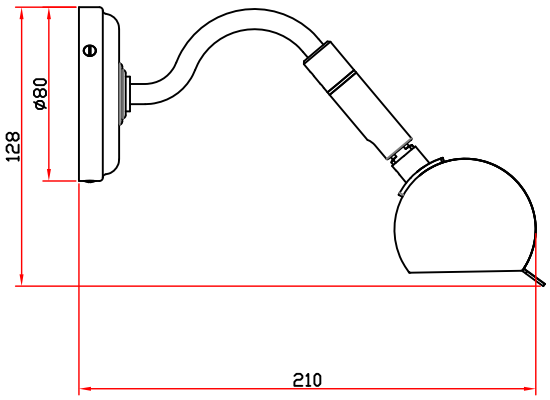

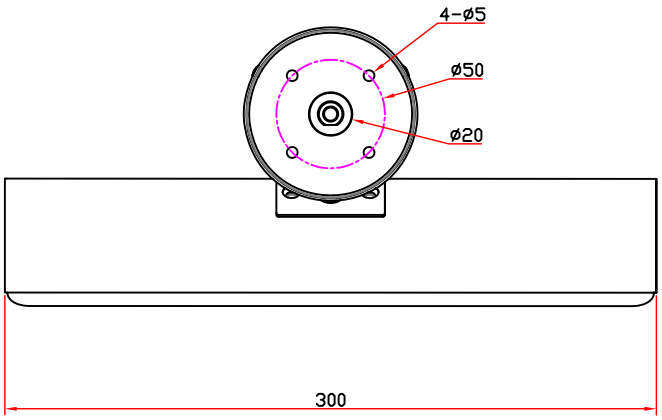

PL/8/300

CHELSOM
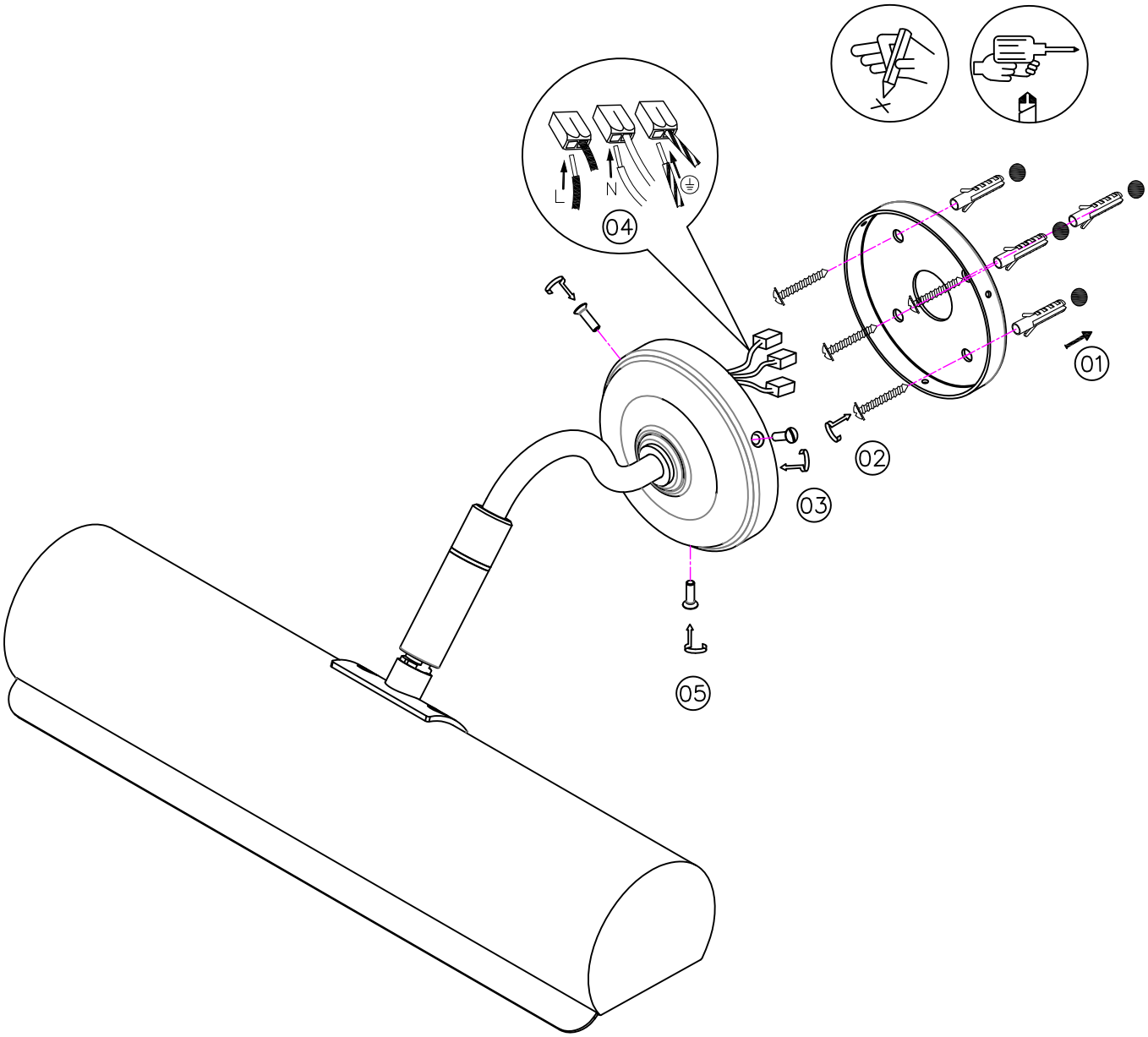
FOLLOW THE NUMBERED ASSEMBLY SEQUENCE